Version 1.0 2025.06.23

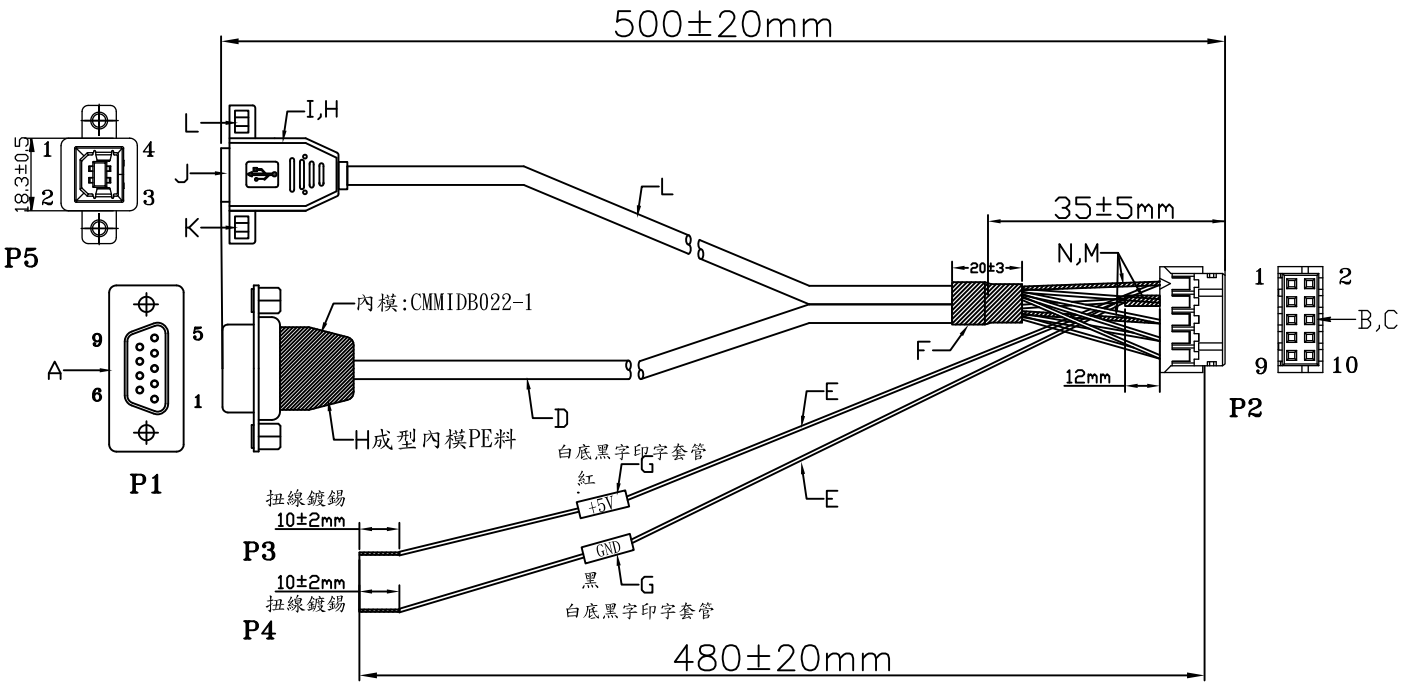

MATERIAL:

A:DB 9P FEMALE,黑膠芯,后鉚通孔六角螺母,4#40
B:H.S.G P/N:2220H-10(2x5P),White,Pitch:2.0mm
C:TERMINAL P/N:2221P
D:UL 2547 28#/3C+AL OD:3.5mm,COLOR:灰色
E:UL 1007 26AWG COLOR:紅x1,黑x1
F:TUBE:L=20mm BK
G:白底黑字印字套管內容:+5V,GND

H:MOLDING COLOR:PE料
I:MOLDING COLOR:BLACK PVC 50P
J:USB B TYPE 4P FEMALE,焊線式,G/F
K:SCREW:螺帽:,4#40 Ni
L:UL 2725 28#/1P+28#/2C+AEB(16/4/0.10TC)
OD:3.8mm,COLOR:BLACK 2.0版
M:TUBE:L=12mm
N:TUBE:BK
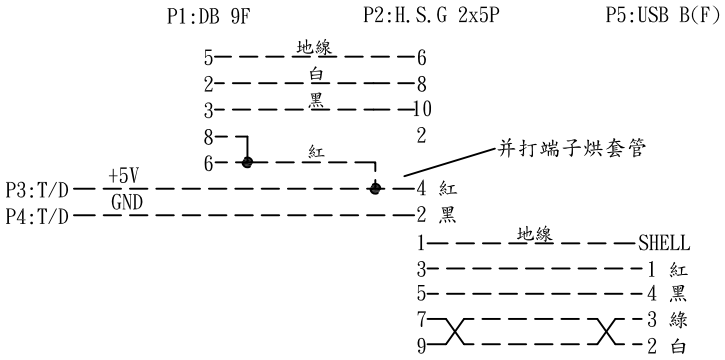
CIRCUITS: